Collaborators:
Keeshan P
Aditya T
Shaurya G

CURM 2017

General Information

CURM stands for convention for unconventional robotic movement. The premise of the showcase/competition was to create a robot that moves in a unique way. The only rule of the competition was not to use wheels or tank treads. The competition was occurred during the spring 2017 semester. The competition occurred on April 8th, 2017.

Project Overview

The robot we designed was a walking robot with 8 servo motors.

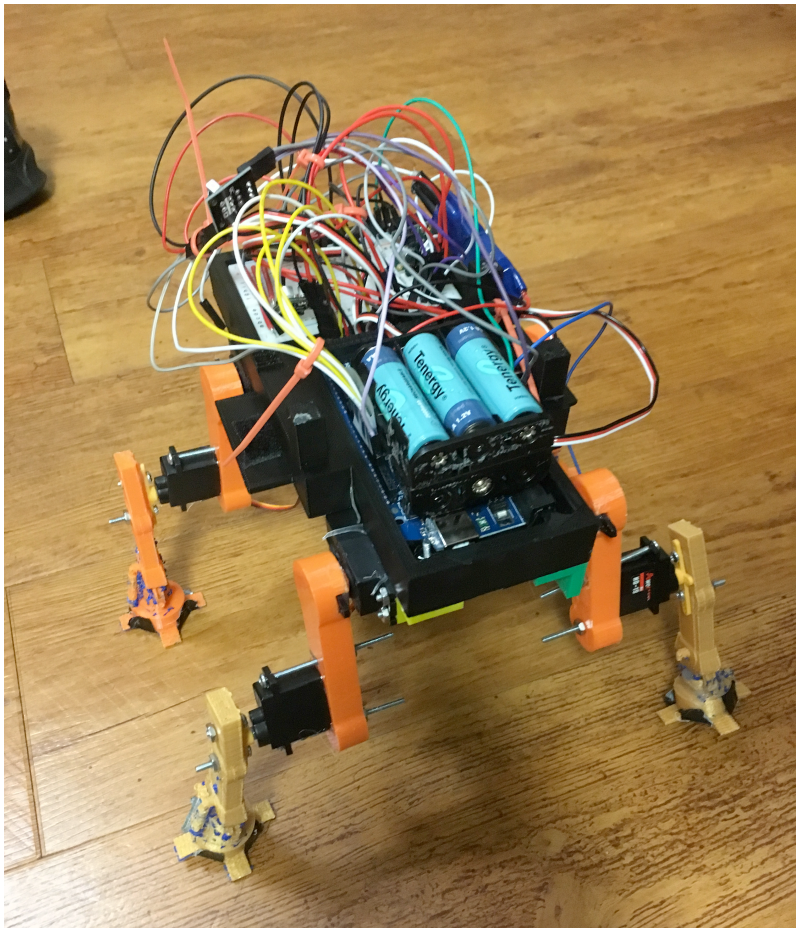

Documentation created by Keeshan Patel

Initial Plan

Start of Project

Brainstorm and Initial ideas

When originally thinking of an unconventional way to move, the team taught of a hover board which utilized a drone motor for slight lift off the ground and one an additional drone motor for movement which pivoted on servo motor.

Changes to initial plan

When we gathered all the materials the motor controller for the drone motor was only receiving power from the Arduino and not the battery. We changes to a mechanical movement system and thought of an AT-AT walker.

Finalized Plan

We wanted to mimic the movement and look of the AT-AT walker from Star Wars. To achieve this we used 8 servos motors in conjunction with custom 3D printed parts. We used an Arduino mega 2560 to program and control the servos and used an IR sensor to remotely communicate commands to the robots.

Design

Materials

- Arduino Mega with 2560 chipset
- Half size breadboard
- IR sensor
- IR Remote
- 6x rechargeable nickel hydride batteries (1.2 V each)
- Battery holder
- Recharge cable connector
- 4x continuous servo motors (large)
- 4x position servo motors (small)
- 2x 5V/5A regulator
- Header wires
- 3D printed components

Design

CAD Files:

Used legs from AT-AT Walker modeled on Thingyverse:

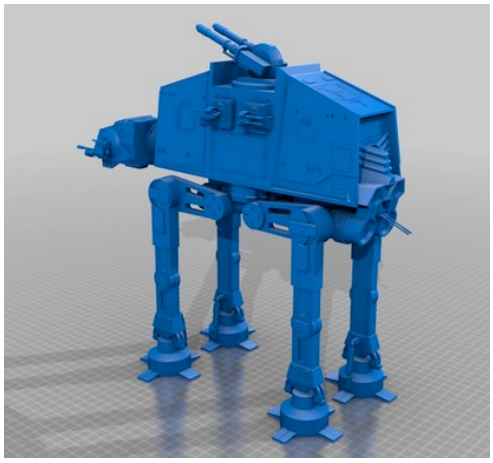

Battery Holder:

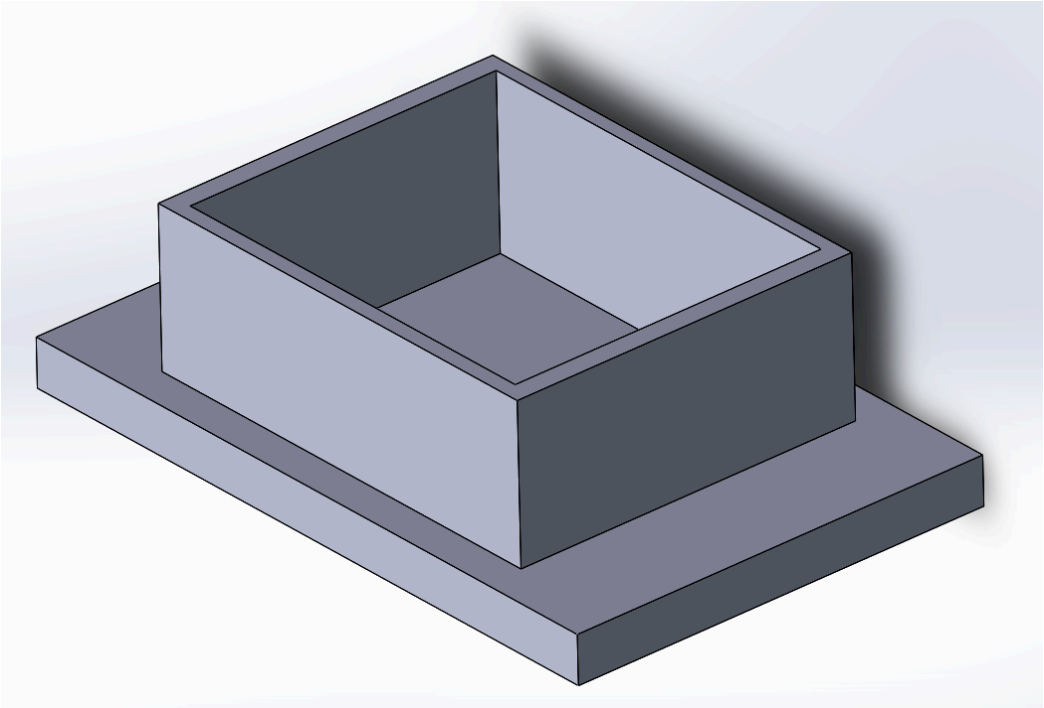

Wiring Schematic:

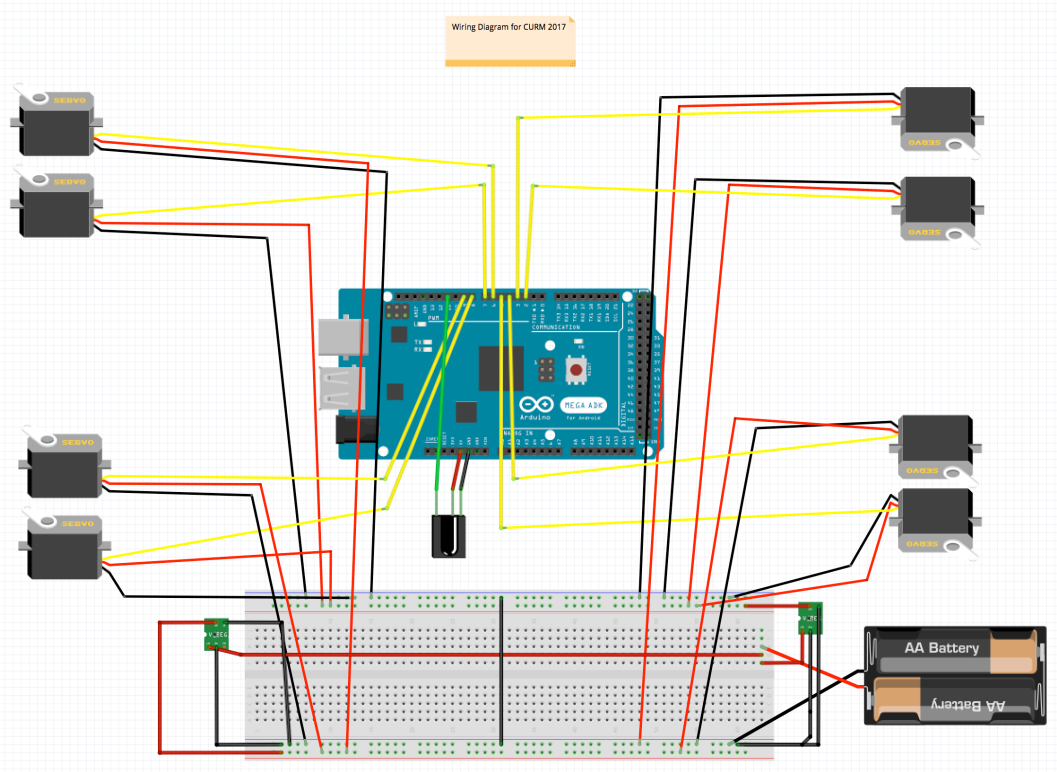

Start of Build

Progress

1. The servos were tested with Arduino software
2. The IR sensor was tested and coded to make the servos turn
3. 3D printing of the cases was one on a professional 3D printer
4. The lower legs/feet were printed using Makerbot printers
5. Custom upper legs were caded and printed to fit the servo fittings
6. Screws were drilled into 3d printed parts
7. Servos were attached to feet using screws and nuts
8. L brackets were created to attach large servos to housing
9. All mechanical components were put together
10. All electrical components went onto the casing
11. Wiring was done based on electrical schematic
12. Code was made to initialize the motors
13. Calibration code was made for the legs to set in exact spot every time the robot turned on
14. Testing for forward motion was attempted
15. Extra movement options were coded and mapped to buttons on the IR

End of Build

Final Product and Results

Results

The IR communication between the robot and the remote was done successfully. Calibration was executed successfully and forwards movement was accomplished by moving the front 2 legs down and up repeatedly. Other functions of the robots such as a pack up mode where all the legs folded were mapped to different buttons on the remote. The robot did not move like the AT-AT walker as intended due to the calibration challenges.

The robot was presented at the CURM showcase and it received Most Humanoid Award.

What was learned

- The small position based servos required a separate voltage regulator
- Holes should be measured and caded into 3D printed parts for easily assembly
- Calibration of continuous and positional based motors were extensive challenging since not all the servos moved at the same speed based on the command given in code
- Casing for robot was too big of a print for the professional printer so it was halted at 25% completion

Future Plans

- A casing for the robot would need to be made.
- The walking would need more calibration and testing so it can move like an AT-AT walker.
- A power switch should be added so that connecting and disconnecting wires would not the only method of powering the robot

Synopsis

Overall, the robot was successfully made and it accomplished the task of making a robot move without the use wheels or tank treads. Although the robot did not move like a conventional 4 legs creature, movement was achieved through other means. Wireless communication was a big positive as one did not physically have to touch the robot to change its movements. Also, valuable lessons were learned in mechanical and electrical design.